SUB FORCE™ 35

Data Sheet

SUB FORCE™ 35 is a slim cardioid 3 x 15" sensor-controlled bass extension which extends the ViFORCE™ system response down to 25Hz.

Multiple SUBFORCE™s can be flown behind or together with ViFORCE™ to create a slim and powerful bass array with cardioid horizontal directivity control.

Vertical SUB FORCE™ arrays can be splayed and delayed for adaptive vertical directivity control up to 200Hz as well as perfect time alignment with ViFORCE™. There is a significant difference between electronically shaped array and a physically shaped array. A physically shaped (mechanical splay) array is much more stable at the upper frequency range.

Two front-facing 15" drivers are supported by another at the rear. Engineered for high efficiency and wide bandwidth, these loudspeakers are unusual in that their response extends to 25Hz, whilst providing the punch and "kick" that we all love from a 15" driver.

Along with the usual rear facing drive unit and porting, our WIDEBAND Cardioid™ subwoofer design has ports to the side of the cabinet. This allows not just the same three path length cancellation as ViFORCE™, but means the subwoofer can be placed against a wall, without losing output or causing the driver damage that would occur if you were to place a conventional cardioid subwoofer in this manner.

SUB FORCE™ 35 drivers contain an integrated velocity sensor that measures the diaphragm movement in real time, compares it with the input audio signal and adjusts the amplifier driving voltage and/or current, correcting any driver inaccuracy. The sensor creates a self-optimising, closed feedback-loop in which the driver confirms precisely the power it needs to accurately reproduce the original audio signal. The key advantage is a very extended and controlled response.

Further enhancing performance and reliability, all drivers in the cabinet benefit from our Dynamic Airflow Cooling (DAC) technology, where the heat is taken away from the voice coils, through the driver chassis into the aluminium baffles that form part of the hybrid cabinet structure. This allows further unique flexibility for a touring product.

SUB FORCE™ 35 Features

- Extends the ViFORCE™ system response down to 25Hz.
- Unique WIDEBAND Cardioid™ (WBC) technology ensures extended cardioid control in the range 25Hz – 200Hz.
- SUB FORCE™ 35 can be flown to create a slim bass line source with cardioid horizontal directivity control.
- Integrated 3-point rigging with vertical splay of 0°, 3° or 6° for adjustable vertical directivity control and precise time alignment.
- Sensor control for accuracy - the feedback loop ensures extremely fast transient response and ultra-low distortion
- Dynamic Airflow Cooling (DAC) ensures exceptionally high sound pressure and low power compression
- It can be placed in front of wall / stage
- System integration with LINUS Loudspeaker Management Amplifiers

CODA
CODA AUDIO

SUB FORCE 35 Data Sheet

System specifications SUB-FORCE™ 35	
Product type:	Slim, cardioid 3 x 15" sensor-controlled subwoofer
Application	Sub or Bass Extension for ViFORCE™
Frequency response (Extension mode)	30 – 200 Hz
Frequency responce (Sub mode)	25 – 70 Hz
Directivity	Cardioid
Maximum peak SPL (with LINUS14):*	143 dB
Cabinets per LINUS14:	2 x

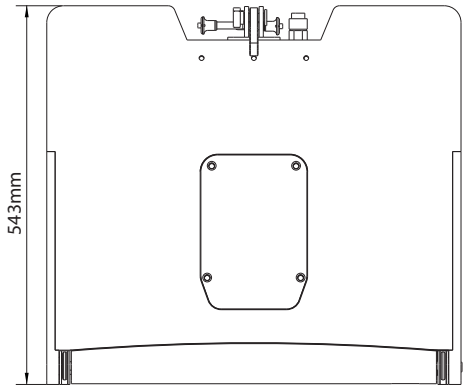

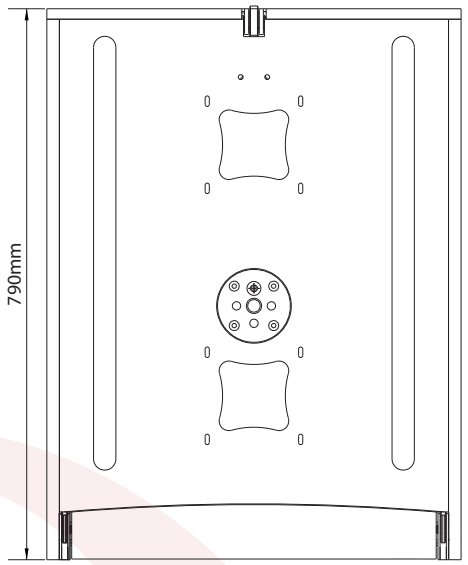

Loudspeaker specifications (single SUB-FORCE™ 35)	
Front AES / Peak	3000 W / 12000 W
Side (cardio section) AES / Peak	1500 W / 6000 W
Dispersion Horizontal	WIDEBAND Cardioid™
Vertical splay	0°, 3°or 6°
Components Front	2x 15" neodymium, ultra-low distortion woofers, 4"VC with integrated velocity sensor, DAC loaded
Components Rear	1x 15" neodymium, ultra-low distortion woofer, 4"VC with integrated velocity sensor, DAC loaded
Nominal impedance Front	4 Ω (+-1)
Nominal impedance Rear	8 Ω (+-2)
Input connectors	Neutrik™ NLT4M
Velocity sensors output	Neutrik™ NC5FDL1
Enclosure material	Hybrid: Birch plywood / Aluminium
Finish	Polyurea coating
Suspension	Integrated 3-point rigging with vertical splay of 0°, 3° or 6°
IP rating (IEC 60529)	IP54
Weather protection options	Standard IP55: IP55 (Amphenol connectors) MG1 (Marine Grade 1): IP55
Dimensions (WxHxD)	594 x 960 x 790 mm / 23.39 x 37.80 x 30.10"
Net weight	109 kg / 240.30 lbs

* Measured with pink noise 12 dB Crest Factor, half space.

SUB FORCE™ Presets:			
SUB-Max Rejection	25-70Hz	WIDEBAND Rear Cancellation	Good Front Coupling
SUB–Max. SPL (+1.5dB more SPL)	25-70Hz	Some Rear Cancellation	Excellent Front Coupling
Extend-Max. Rejection	30-200Hz	WIDEBAND Rear Cancellation	Good Front Coupling
Extend-Max. SPL (+1.5dB more SPL)	30-200Hz	Some Rear Cancellation	Excellent Front Coupling

Other SUB FORCE™ 35 System Products

ViFORCE™

LINUS M-RACK

4 Channel DSP
Amplifier Rack

LINUS T-RACK

12-Channel DSP
Amplifier Rack

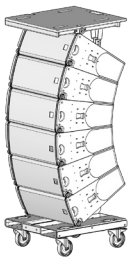

Accessories

CODA AUDIO GmbH
Boulevard der EU 6, 30539 Hannover, Expo Park, Germany
E-Mail: contact@codaaudio.com Website: www.codaaudio.com

CODA
CODA AUDIO